* 0019655344301 *

Cambridge Assessment International Education

Cambridge International AS & A Level

CANDIDATE NAME

CENTRE NUMBER

CANDIDATE NUMBER

* 5 4 1 3 5 1 2 0 8 4 *

PHYSICS **9702/52**

Paper 5 Planning, Analysis and Evaluation **May/June 2024**

1 hour 15 minutes

You must answer on the question paper.

No additional materials are needed.

INSTRUCTIONS

- Answer **all** questions.
- Use a black or dark blue pen. You may use an HB pencil for any diagrams or graphs.
- Write your name, centre number and candidate number in the boxes at the top of the page.
- Write your answer to each question in the space provided.
- Do **not** use an erasable pen or correction fluid.
- Do **not** write on any bar codes.
- You may use a calculator.
- You should show all your working and use appropriate units.

INFORMATION

- The total mark for this paper is 30.
- The number of marks for each question or part question is shown in brackets [ ].

This document has **8** pages.

© UCLES 2024

[Turn over

1 A spring is attached to a strong cylindrical magnet of length L and cross-sectional area A. The magnet is placed on thin card on top of a magnetic sheet on the bench, as shown in Fig. 1.1.

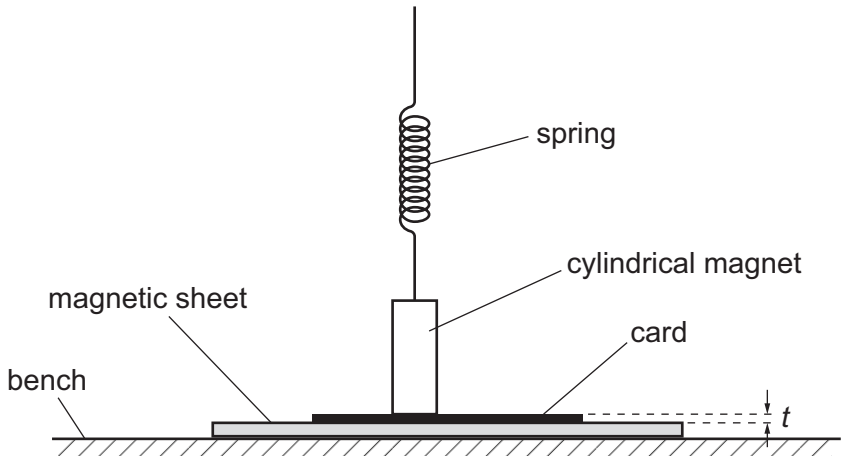

Fig. 1.1

The thickness of the card is t. The magnetic flux density at one of the poles of the magnet is B.

A force is applied upwards to the spring. The extension of the spring when the magnet just leaves the card is s.

It is suggested that s is related to t by the relationship

$$ks = \frac{ALBZ}{t}$$

where k is the spring constant of the spring and Z is a constant.

Plan a laboratory experiment to test the relationship between s and t.

Draw a diagram showing the arrangement of your equipment.

Explain how the results could be used to determine a value for Z.

In your plan you should include:

- the procedure to be followed
- the measurements to be taken
- the control of variables
- the analysis of the data
- any safety precautions to be taken.

DO NOT WRITE IN THIS MARGIN
DO NOT WRITE IN THIS MARGIN
DO NOT WRITE IN THIS MARGIN
DO NOT WRITE IN THIS MARGIN
DO NOT WRITE IN THIS MARGIN

Diagram

DO NOT WRITE IN THIS MARGIN
DO NOT WRITE IN THIS MARGIN
DO NOT WRITE IN THIS MARGIN
DO NOT WRITE IN THIS MARGIN
DO NOT WRITE IN THIS MARGIN

[15]

DO NOT WRITE IN THIS MARGIN
DO NOT WRITE IN THIS MARGIN
DO NOT WRITE IN THIS MARGIN
DO NOT WRITE IN THIS MARGIN
DO NOT WRITE IN THIS MARGIN

2 A student investigates the resonant frequency of a metal rod. The metal rod of length L is suspended from two rubber loops. A sensitive microphone with a cone is positioned at one end of the rod. The microphone is attached to an oscilloscope, as shown in Fig. 2.1.

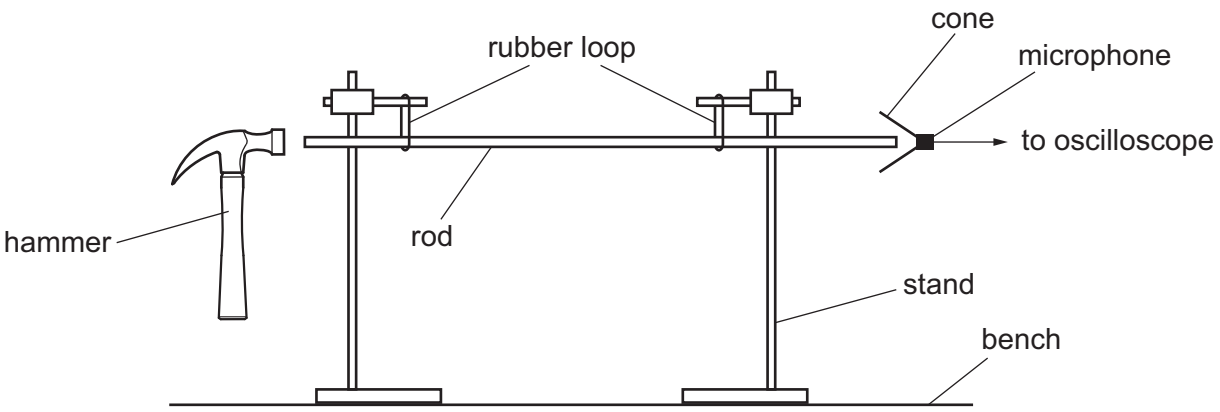

Fig. 2.1 (not to scale)

The rod is hit gently with a hammer.

The period T of the trace produced on the oscilloscope is determined.

The experiment is repeated for different values of L.

It is suggested that T and L are related by the equation

$$T = \frac{2L^n}{C}$$

where C and n are constants.

(a) A graph is plotted of lg T on the y-axis against lg L on the x-axis.

Determine expressions for the gradient and y-intercept.

gradient = ...

y-intercept = ...

[1]

DO NOT WRITE IN THIS MARGIN

(b) Values of L and T are given in Table 2.1.

Table 2.1

L / cm	$T / 10^{-5}$ s	lg (L / cm)	lg ($T / 10^{-5}$ s)
54	24 ± 1		
70	32 ± 1		
86	39 ± 1		
108	49 ± 2		
140	64 ± 2		
167	74 ± 2		

Calculate and record values of lg (L / cm) and lg ($T / 10^{-5}$ s) in Table 2.1.
Include the absolute uncertainties in lg T. [2]

(c) (i) Plot a graph of lg ($T / 10^{-5}$ s) against lg (L / cm). Include error bars for lg T. [2]

(ii) Draw the straight line of best fit and a worst acceptable straight line on your graph. Label both lines. [2]

(iii) Determine the gradient of the line of best fit. Include the absolute uncertainty in your answer.

gradient = ... [2]

DO NOT WRITE IN THIS MARGIN
DO NOT WRITE IN THIS MARGIN
DO NOT WRITE IN THIS MARGIN
DO NOT WRITE IN THIS MARGIN
DO NOT WRITE IN THIS MARGIN

DO NOT WRITE IN THIS MARGIN
DO NOT WRITE IN THIS MARGIN
DO NOT WRITE IN THIS MARGIN
DO NOT WRITE IN THIS MARGIN
DO NOT WRITE IN THIS MARGIN

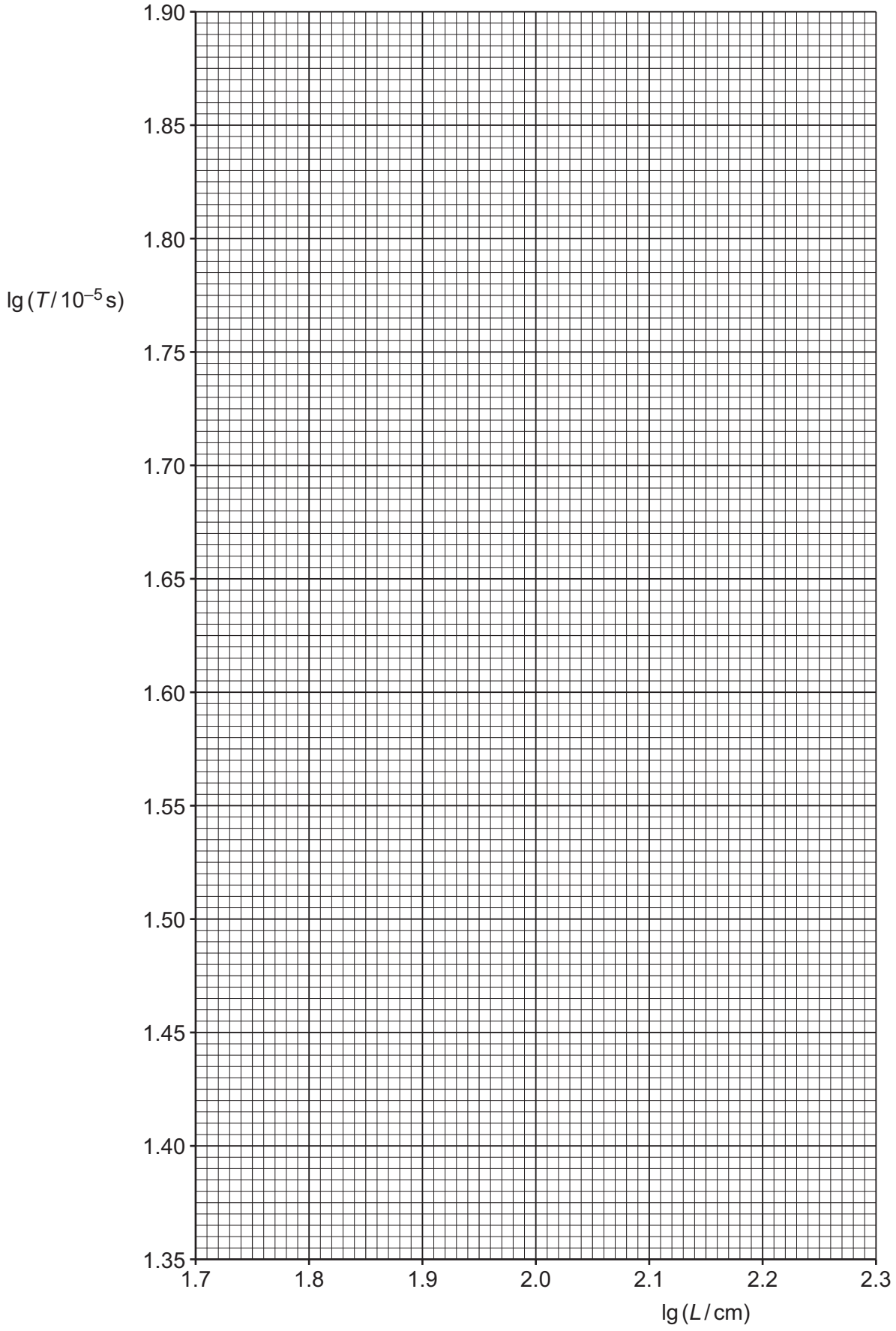

(iv) Determine the *y*-intercept of the line of best fit. Include the absolute uncertainty in your answer.

y-intercept = ... [2]

(d) Using your answers to **(a)**, **(c)(iii)** and **(c)(iv)**, determine the values of *n* and *C*. Include the absolute uncertainties in your values. You need not be concerned with units.

n = ...

C = ...
[3]

(e) The experiment is repeated. Determine the length *L* of the rod that gives a value of *T* of 0.10 ms.

L = ... cm [1]

[Total: 15]

To avoid the issue of disclosure of answer-related information to candidates, all copyright acknowledgements are reproduced online in the Cambridge Assessment International Education Copyright Acknowledgements Booklet. This is produced for each series of examinations and is freely available to download at www.cambridgeinternational.org after the live examination series.

DO NOT WRITE IN THIS MARGIN
DO NOT WRITE IN THIS MARGIN
DO NOT WRITE IN THIS MARGIN
DO NOT WRITE IN THIS MARGIN
DO NOT WRITE IN THIS MARGIN